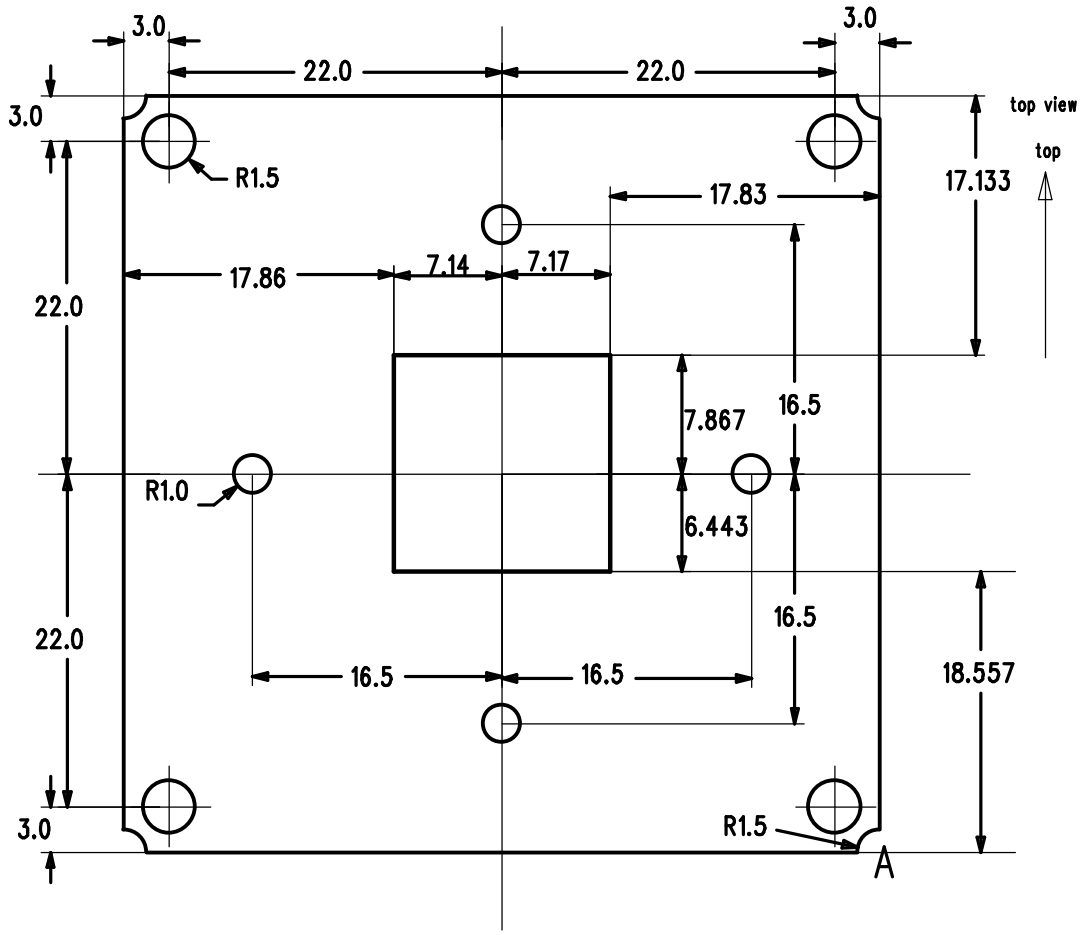

PDF created with FinePrint pdfFactory Pro trial version www.pdffactory.com